Soil Moisture Monitoring System

Micro Project Report

Submitted by
Cathelin C Thomas

Project Repository: Soil Moisture Monitoring

1. Introduction and Objectives

Maintaining proper soil moisture is essential for healthy plant growth and efficient water use. Traditional irrigation often ignores soil needs, causing waste or under-watering. This project develops a smart system using an ESP32 development board and a soil moisture sensor to monitor levels and automate irrigation.

Objectives

- Monitor soil moisture levels in real time.
- Automate watering based on soil conditions.
- Reduce water wastage and manual effort.
- Ensure proper water supply for healthy plant growth.

2. Block Diagram and Explanation

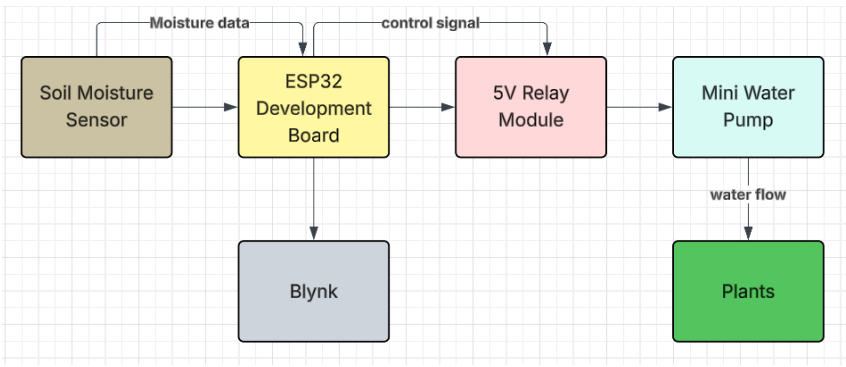

Figure 1: Block Diagram of Soil Moisture Monitoring System

The soil moisture sensor measures soil water content and sends it to the ESP32, which controls a relay to switch the water pump ON or OFF based on moisture level, while also sending data to the Blynk app for monitoring.

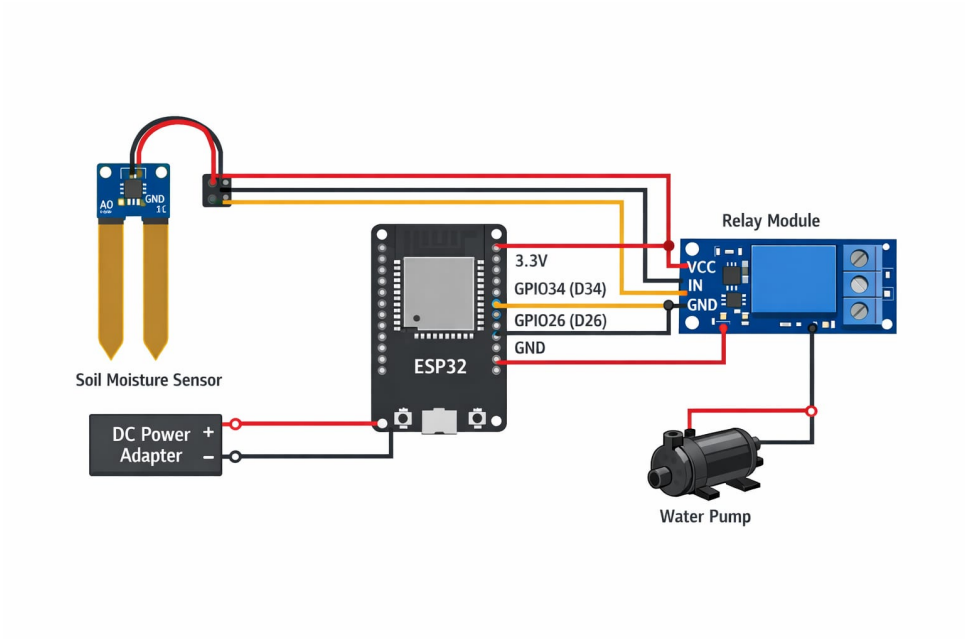

Figure 2: Circuit Diagram

3. Circuit Diagram and Components

Components Used

- ESP32 Development Board
- Soil Moisture Sensor Module
- Relay Module (5V)
- Mini DC Water Pump
- Jumper wires, Breadboard
- USB Cable
- Adapter or battery (5V)

Working Principle : The soil moisture sensor continuously measures the moisture level of the soil and sends the data to the ESP32. The controller compares this value with a set threshold and decides whether watering is needed. If the soil is dry, it sends a control signal to the relay to turn ON the water pump, supplying water to the plants. Once sufficient moisture is reached, the pump is turned OFF. The system can also be monitored and controlled remotely using the Blynk app.

4. Code and Interfacing Logic

Interfacing Connections

- Soil Moisture Sensor → A0

- Relay Module → D26
- Water Pump → Relay Module(NO/COM)
- VCC → 3.3V /5V
- GND → Common Ground

Code Description

- Initializes ESP32 and sets up Wi-Fi and Blynk connection
- Reads analog data from the soil moisture sensor
- Sends the moisture data to Blynk app
- Activates relay to turn ON pump when soil is dry and turns it OFF when moisture is sufficient

5. Working Model

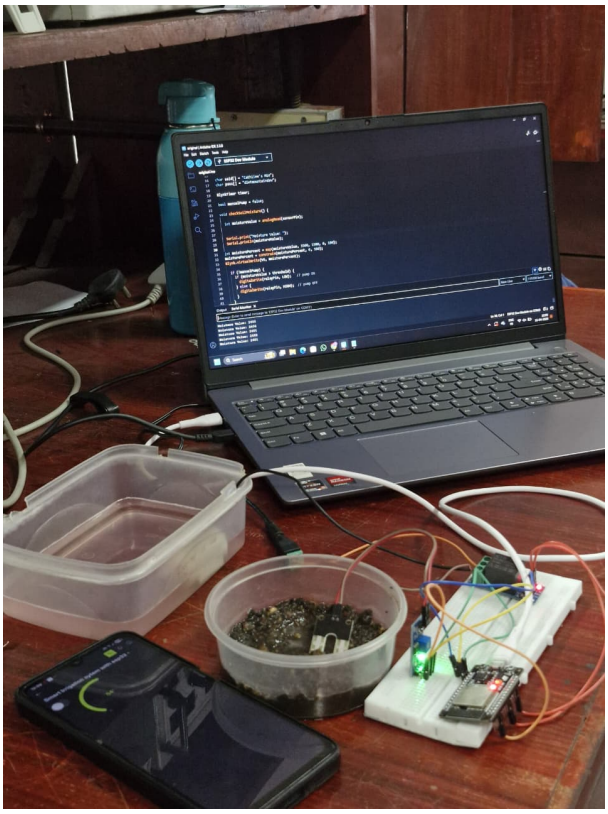

Figure 3: Working Model

6. Conclusion

The Soil Moisture Monitoring System effectively automates irrigation by monitoring soil moisture and controlling water supply using the ESP32 development board. It ensures efficient water usage by turning the pump ON only when required and provides real-time monitoring through the Blynk app. This project demonstrates a simple, cost-effective, and reliable solution for smart agriculture and water conservation.